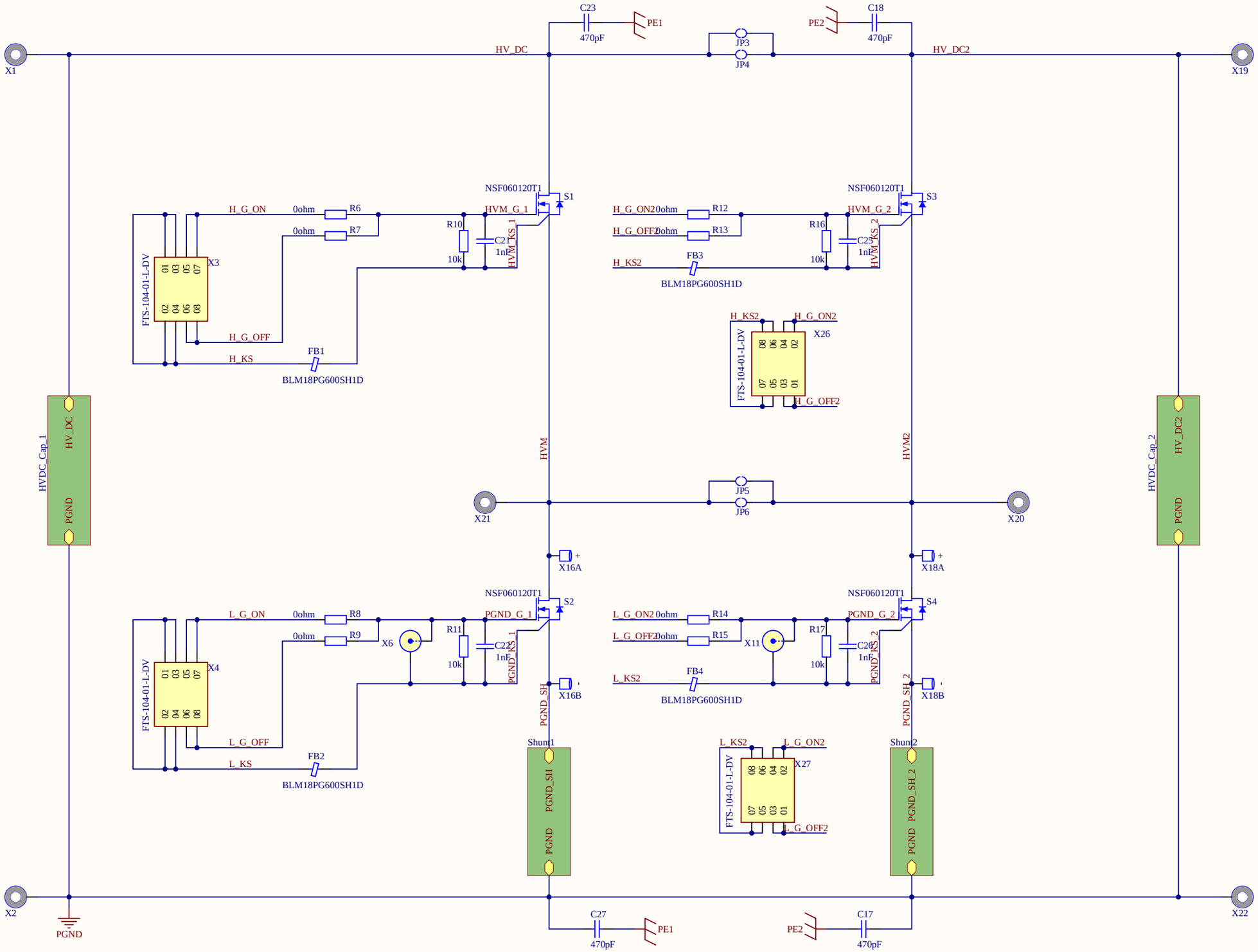

Project	nexperia
Title	Fullbridge with SMD-Shunt QDPAK
Author	Zhe Yu
ReviewedBy	
Date	03.2025
Revision	Rev 1.0
Sheet	1 of 5

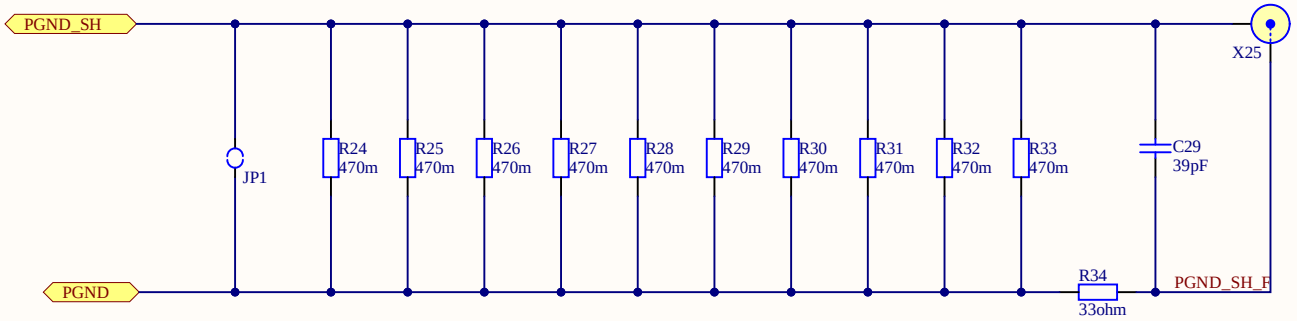

Project	nexperia
Title	Fullbridge with SMD-Shunt QDPAK
Author	Zhe Yu
ReviewedBy	
Date	**Revision** **Sheet** 2 **of** 5

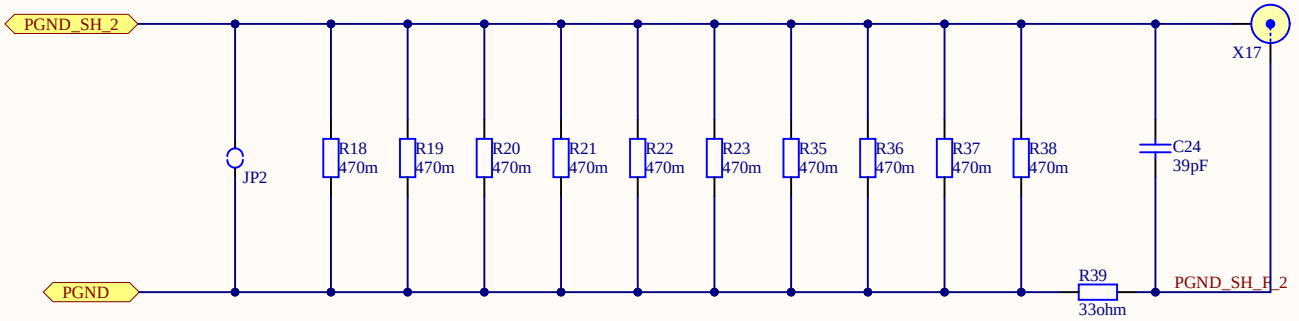

Project	nexperia
Title	Fullbridge with SMD-Shunt QDPAK
Author	Zhe Yu
ReviewedBy	
Date	**Revision** **Sheet** 3 **of** 5

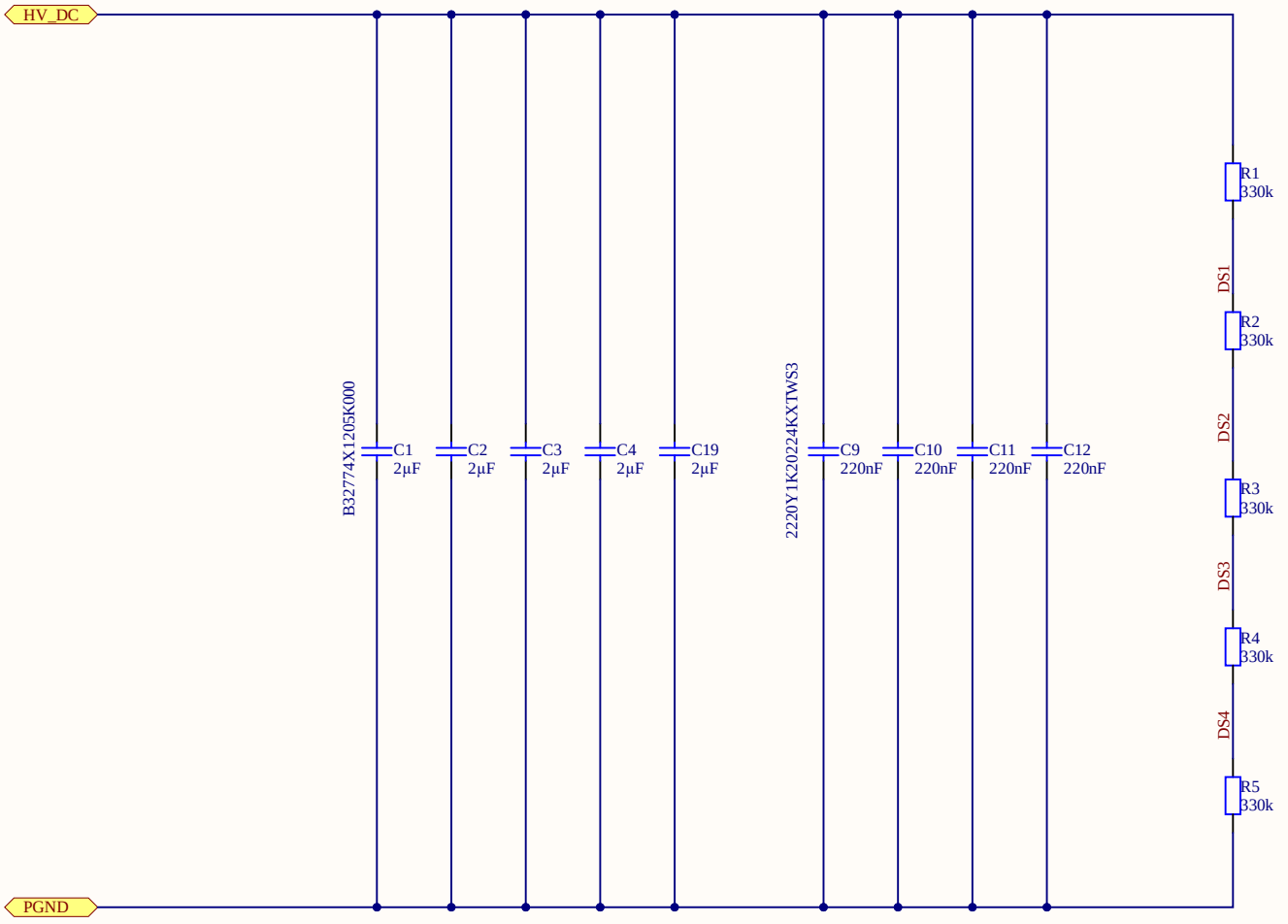

Project		nexperia
Title	Fullbridge with SMD-Shunt QDPAK	
Author	Zhe Yu	
ReviewedBy		
Date	**Revision**	**Sheet** 4 **of** 5

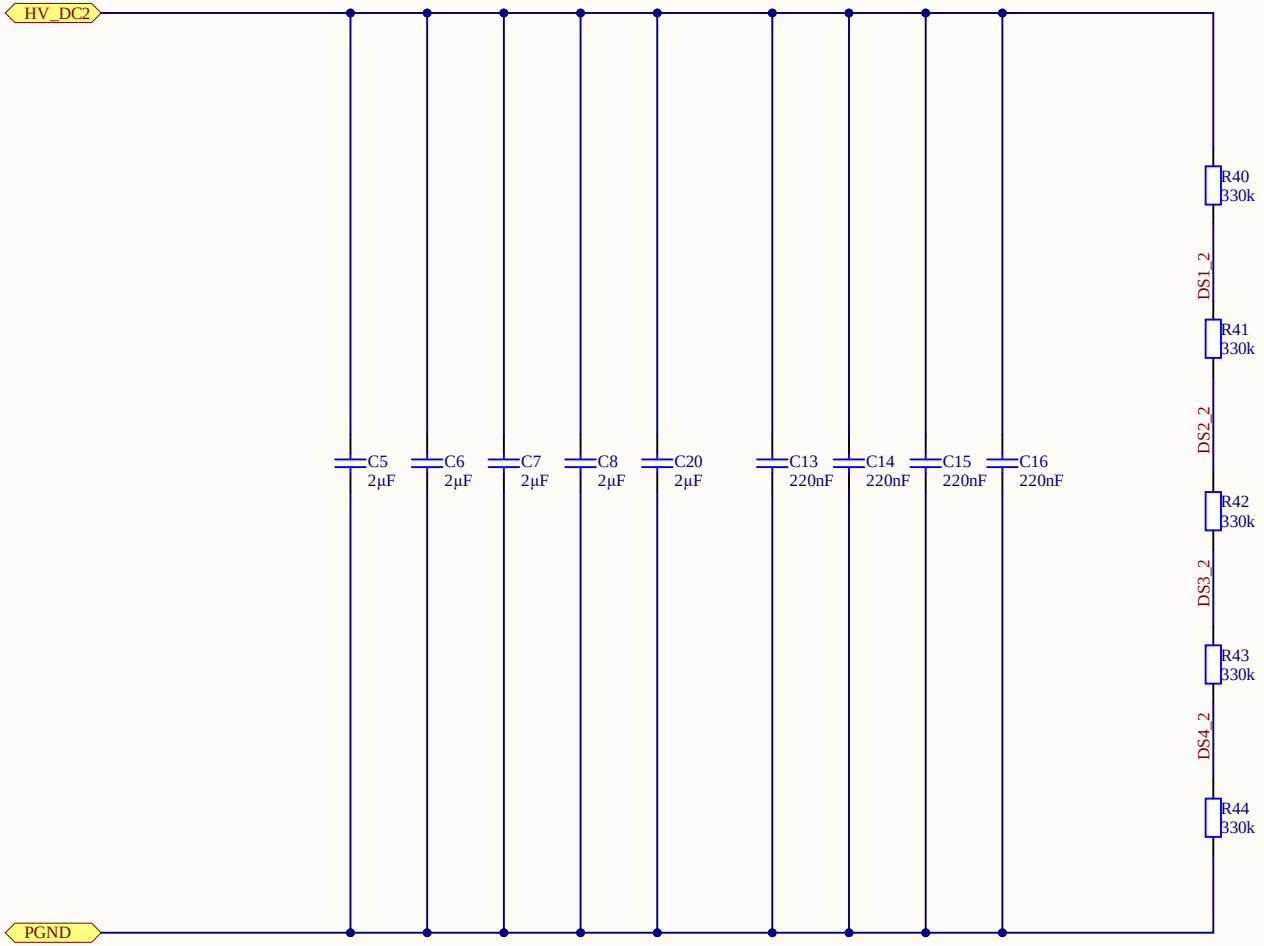

Project		nexperia
Title Fullbridge with SMD-Shunt QDPAK		
Author Zhe Yu		
ReviewedBy		
Date	**Revision**	**Sheet** 5 **of** 5